* Recommended

ROCKWELL SOLUTIONS

To: County of San Benito
Attn: John Cosentino

January 20th, 2019

RE: Vogelsang In-Line Grinder

RS

John: Please see the attached information regarding the Vogelsang In-Line Grinder. This unit is a plug and play duplicate to your existing grinder.

San Benito County MM Replacment / Sludge, No specifics / 4 % Solids / 1000 gpm
XRP136-200 6 inch AssemblyX-Ripper Assembly
XRipper .....: (Model XRP136-200Q)
Drop in replacement for.....: JWCE 30004T-1206
Material of Construction....: Cast Iron
Ripper Rotor.....: High Wear Resistant Special Steel 9.5 mm
Mechanical Seals.....: Cartridge Single - Block Ring SS304 Cr2O3/Duronite
Cartridge O-Rings.....: NBR
Wear Plate Material.....: High Wear Resistant Special Steel
Flange Left.....: Mild Steel Galvanized, Straight, 6 inch
Flange Right.....: Mild Steel Galvanized, Straight, 6 inch
Drive Type.....: Geared Motor
Motor Part Number.....: US.GM0072
Motor.....: Nord 3 HP, 460 V, 60 HZ, 1770 RPM
Gear Motor RPM (Output).....: 47.00
Motor Frame Size.....: 100LP
Motor Enclosure.....: TEFC

Price:	$ 14,284.-each
Tax:	$ 1,035.59
Freight:	$ 840.-
Total:	$ 16,159.59

Delivery: **4 – 6 Weeks** F.O.B. Ravenna, OH

Please call if you have any questions.

Thanks,

Kent Rockwell

Rockwell Solutions
Northern California Office:
1839 Ygnacio Valley Rd, Suite 244
Walnut Creek, CA 94598

Cell Phone: 949-275-8100
E-mail: kent@rockwellsolutions.us

Phone: 888-357-7888
Fax: 888-214-6635

Scope

Provided By:
Rockwell Solutions
Attn: Accounts Payable
Kent Rockwell
21163 Newport Coast, Suit #492
Newport Beach, CA 92657
(949) 275-8100
kent@rockwellsolutions.us

VOGELSANG

Quote #: 107549 v. 00

Date: 01.09.2019
No. of Pages: 1
Valid To:
Delivery Terms: PPA (PrePay and Ad
Credit Terms: 30% Down, 60% Net 30, 10% Retainage
Project Name: San Benito County MM Replacment

Any item not specifically listed in the quotation will not be supplied by Vogelsang.

Questions? Please contact:Anthony Kowalik at (330) 510 1556 or anthonyk@vogelsangus

Line #	P/N# Description	Qty
San Benito County MM Replacment / Sludge, No specifics / 4 % Solids / 1000 gpm		
1.0	# 10.4022 XRP136-200 6 inch Assembly	1

VOGELSANG

ENGINEERED TO WORK

XRP136-200Q

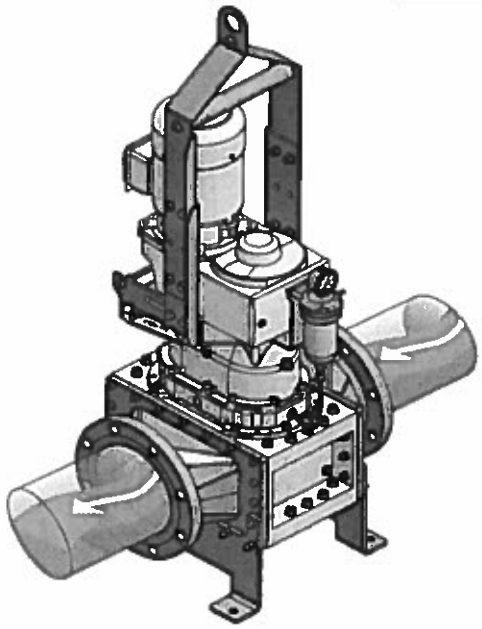

The XRipper® is perfect for inline applications where solids are suspended in a liquid and must be reduced to a specific size suitable for downstream pumps and processing equipment. The compact twin-shaft design provides an economic option for many solids reduction applications.

Vogelsang is pleased to present you with a quote for our revolutionary XRipper® INLINE TWIN SHAFT GRINDER. From our monolithic rotor design, oversized shafts, cartridge mechanical seals, and in-line repair, without costly cartridge exchanges, Vogelsang will be the clear choice for your grinding needs.

XRipper© INLINE TWIN SHAFT GRINDER

Operations:
The XRipper® Cutting Rotors work together to reduce the solids in the liquid to the desired size. Adjusting the rotation of the XRipper® influences the maceration effect as well. The sharp saw-like tips slice and cut while the rough surface grind objects. This combination dramatically improves efficiency and solids reductions.

Maximum Mechanical Seal Life:
XRipper® uses a pressurized oil canister to maintain pressure inside a buffer chamber between the wetend and gearbox. This pressure reduces the wear on the mechanical seals and maintains optimum performance.

Compact Size Reduces Expense:
Small footprints equate to reduced construction and fabrication expenses.

Complete Wet-End Rebuilds Inline:
Unlike typical inline twin-shafted grinders, our Quick Service design provides easy access to the wet end without removing the unit from service or disturbing the connected piping. The cutting elements can be serviced or replaced inline without sending them back for factory reconditioning.

Drive Options:
The XRP series is driven by an inline electric geared motor. It is also available with Submersible Motor, Explosion Proof Motor or Hydraulic Drive.

Run Dry Without Damage:
The XRipper® is designed to run dry indefinitely because the cutting rotors do not contact against each other.

Specification Sheet (1/2)

VOGELSANG

ENGINEERED TO WORK

PROCESS CONDITIONS

Customer Number	114713	Solid Content	Not Provided
Customer Name	Rockwell Solutions, Inc. - Newport Coast Location	% Solids	4.00%
Project	San Benito County MM Replacment	Incoming Solids Max Size	
Quote Number	10754900	Desired Output Solid Size	
Quote Position Number	1	Pumping Temperature	100 °F
Number of Units	1	Liquid pH	7
Required Capacity	1000 gpm	Hours running per day	24 hrs
Maximum Pressure	87.0 psi	Pressure Loss	2.1 psi
Medium	Sludge, No specifics	XRipper Speed	47 RPM
Abrasiveness (1-10)	not Provided	Tag Number 1	Not Specified

XRIPPER INFORMATION

XRipper Part Number		Wetted O-Ring Material	NBR
XRipper Model	XRP136-200Q	Wear Plate Material	High Wear Resistant Special Steel
Material of Construction	Grey Cast Iron	Top Shaft	Parallel Shaft Geared Motor SK3282
Cover Type	Q	Bottom Shaft	Shaft Short
Ripper Rotor Material	Steel	Drain Hose	No
Ripper Rotor Blade Width	9.5 mm	Scraper	No
Stack Height	7.9 inch	Oil Bottle	Standard Pressurized Oil Bottle
Cartridge Stationary Ring Pairing	Steel - Duronit	Buffer Chamber Fluid	Titan Gear MP90 Gear Oil
Cartridge O-Rings	NBR	Drop in replacement for	JWCE® 30004T-1206

GEARED MOTOR INFORMATION

Manufacturer	Nord Gear Corp.	Reducer Options	Rubber Buffers, Hollow Shaft Cover
Vendor Part Number	SK3282AZGH-100LP/4 CUS TF	Efficiency Class	Premium Efficiency
Voltage	230/460	Protection Class	IP55
Full Load Amps	7.68/3.84	Gearbox Mounting Position	M4
Frequency	60 Hz	Terminal Box Position	2
HP	3 HP	Terminal Box Cable Entry	IV
Motor Speed	1770 RPM	Insulation Class	F
RPM (Output)	47 RPM	Thermistors	Yes
Gear Ratio	37.77	Thermostats	No
Shaft / Mounting	Hollow Shaft / B14 Flange	Explosion Proof Class I Div I Group D	No
Shaft Diameter	40 mm	Explosion Proof Class I Div II Group D	No

FLANGE CONFIGURATION

Left Flange Part Number	CON2326	Right Flange Part Number	CON2326
Left Flange Type	Mild Steel Galvanized, Straight	Right Flange Type	Mild Steel Galvanized, Straight
Left Flange Material	Hot Dipped Galvanized Steel	Right Flange Material	Hot Dipped Galvanized Steel
Left Flange Size	6.0 inch	Right Flange Size	6.0 inch

Pressure Loss Curve

VOGELSANG

ENGINEERED TO WORK

XRipper: XRP136-200Q
Project Name: San Benito County MM Replacment
Quote #: 10754900
Medium: Sludge, No specifics
Solids: 4% Dry Solids
Equipment Tag(s):

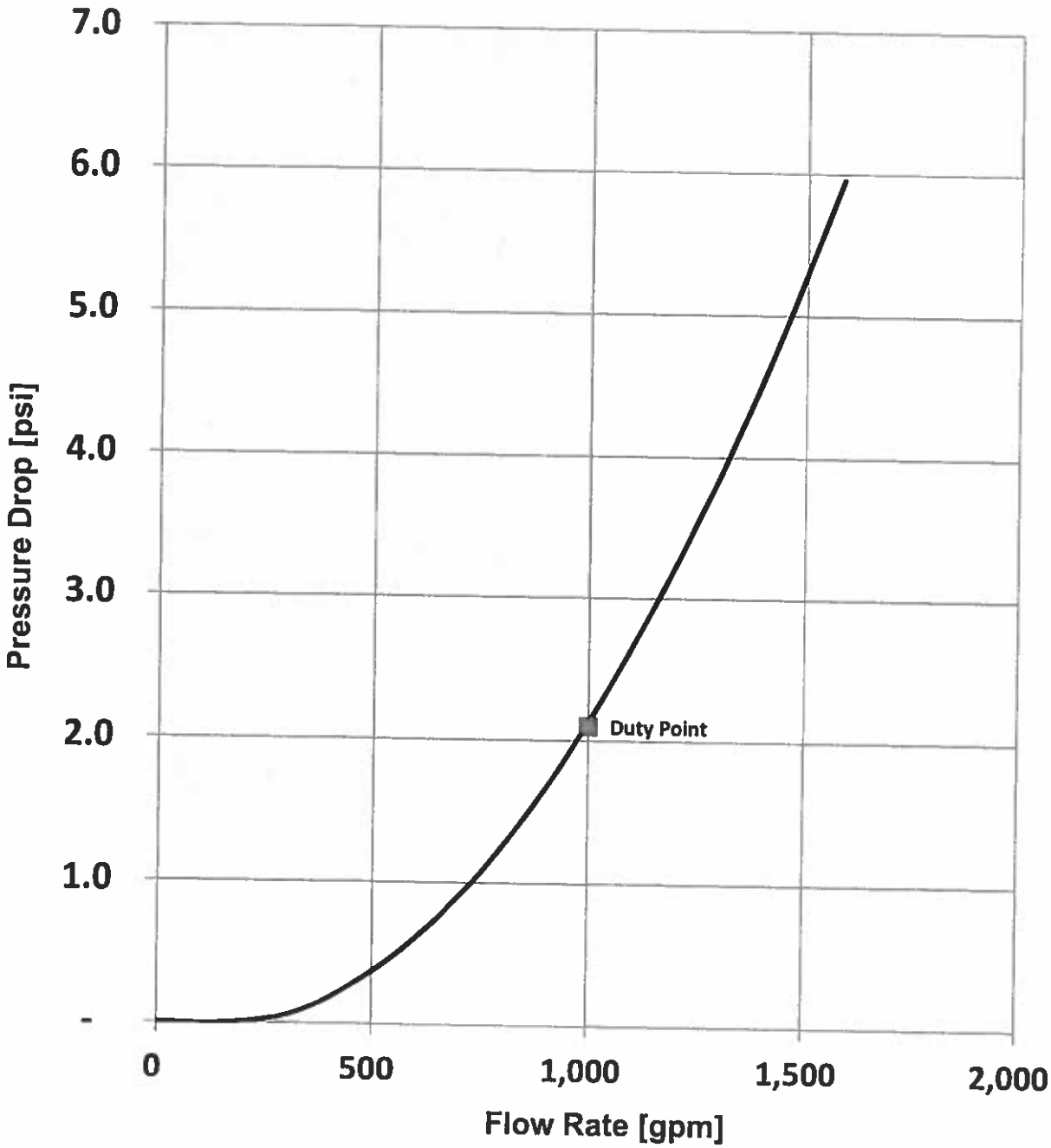

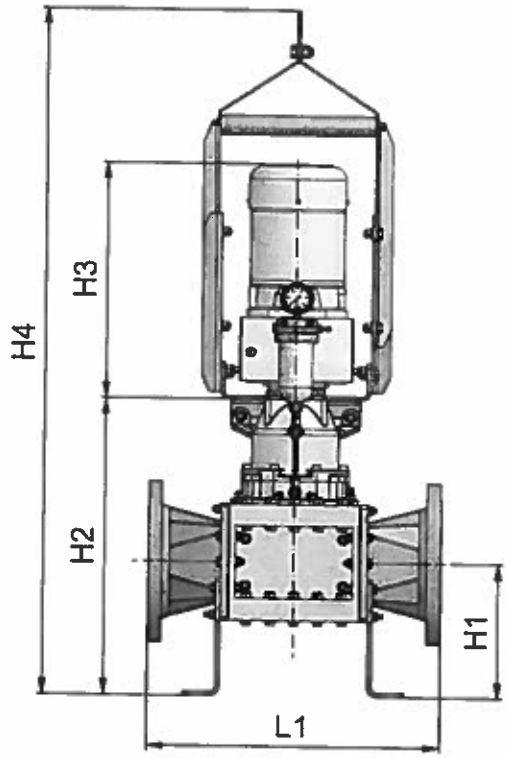

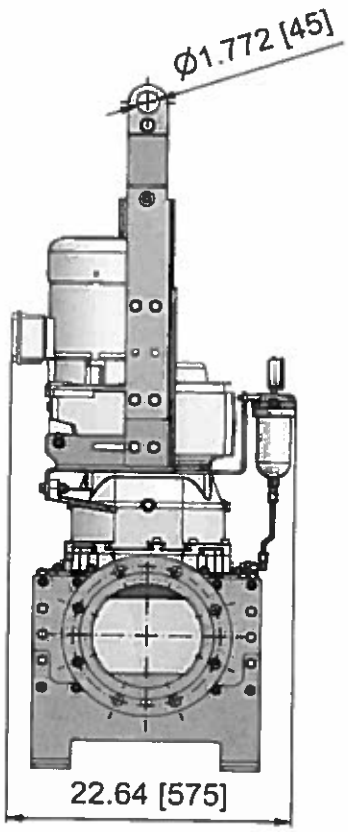

Raised-Face Flange Data Inches	
Norm	ANSI (ASA) B 16.5
DN	6
D	11
k	9 1/2
d	7/8
Hole number	8

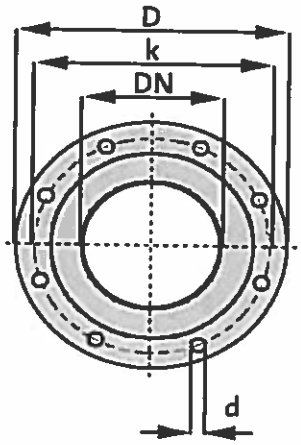

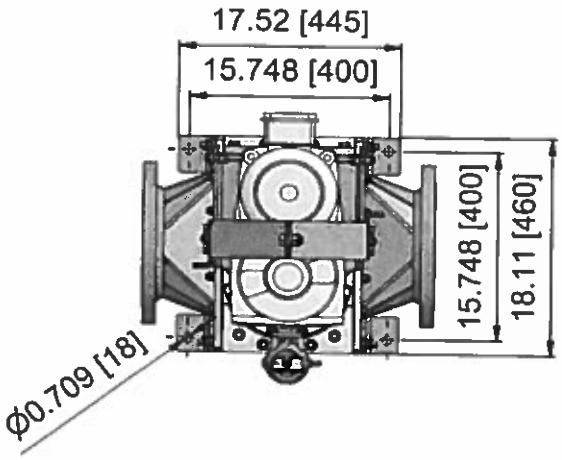

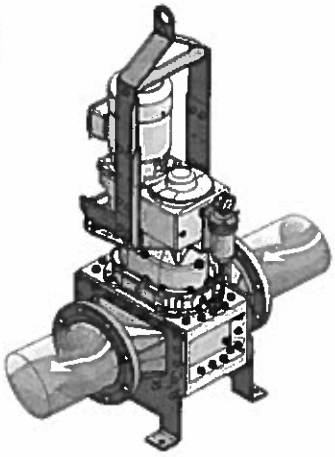

Flow Direction

Vogelsang Data	
Customer	Rockwell Solutions, Inc. - Newport C
Quote ID	10754900
Sales Order No	
Position No	1
Project	San Benito County MM Replacment

Drop in replacement for JWCE® 30004T-1206

All dimensions are shown in inch [mm]

Dimension	inch	mm
L1	21.26	540.00
H1	10.39	264.00
H2	23.98	609.00
H3	19.72	501.01
H4	55.73	1,415.62

XRipper	
Motor	US.GM0072
Flange Left	CON2326
Flange Right	CON2326
Mounting	PAS0105
Total Weight	610 lbs

sales@vogelsangusa.com
PO Box 751, Ravenna, OH 44266-0751
Phone: +1 (330) 510-1556

Date 1/18/2019

© copyright

VOGELSANG
ENGINEERED TO WORK